BODY, FLOOR - Z26NEY99A4/B4/A6/B6 (C0705025-4)

2026 RZR - RZR XP S 1000 ULTIMATE (R01) - Z26NEY99A4/B4/A6/B6

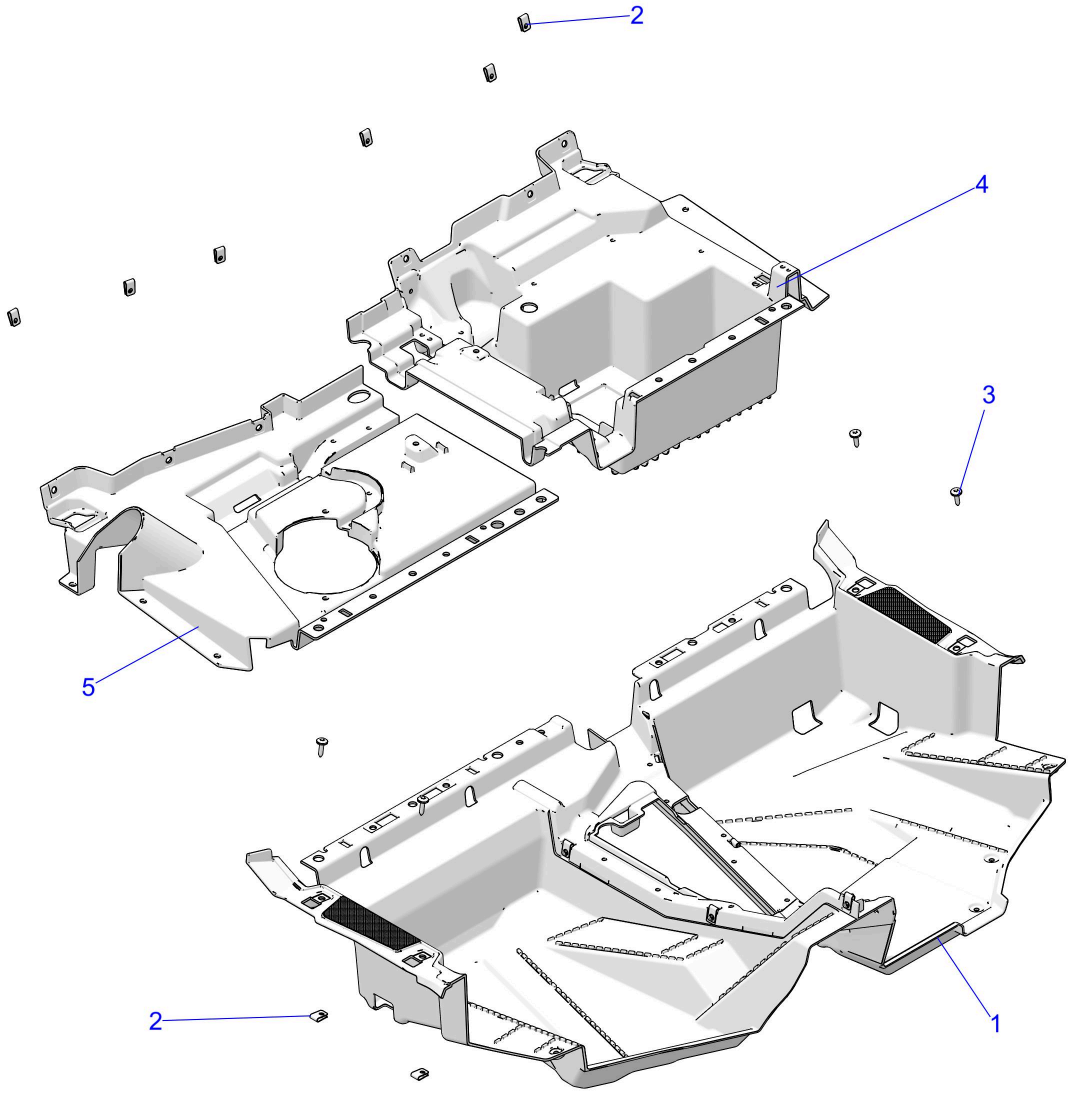

© 2021 Polaris Industries Inc.

C0705025-4

Reference #	*Part#*	*Description*	*Quantity*
1	2638280-070	ASM-FRONT FLOOR,BLK [INCL. QTY. 15 OF 2]	1
2	7547674	NUT-M6-1.0, U-TYPE (2.5-3.8)	AR
3	7519650	SCR-TXTH-M6X1.0X25 ZFB	AR
4	5456550-070	UNDERSEAT CLOSEOUT,LH,BLK	1
5	5456551-070	UNDERSEAT CLOSEOUT,RH,BLK	1

Copyright 1996-2026 Polaris Industries U.S.A All rights reserved.